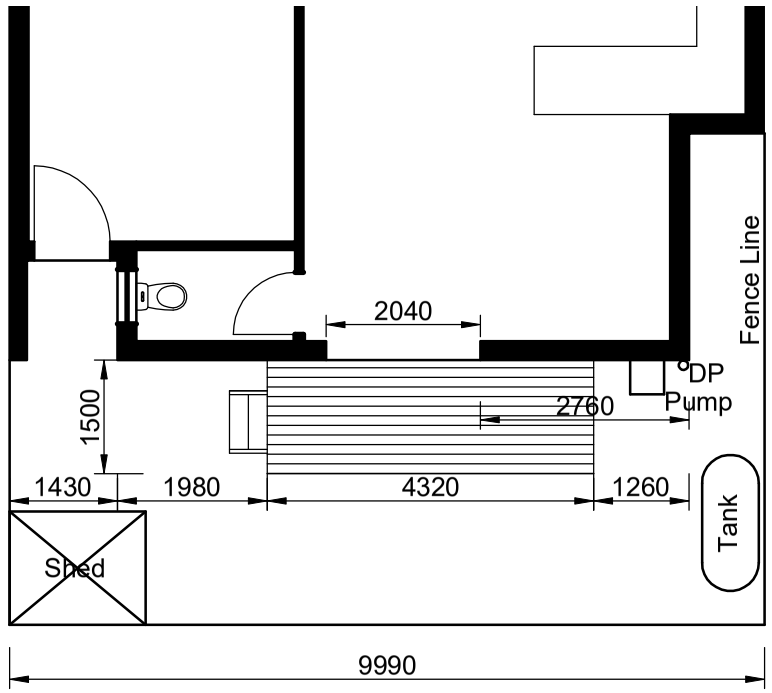

1 Existing Conditions Plan

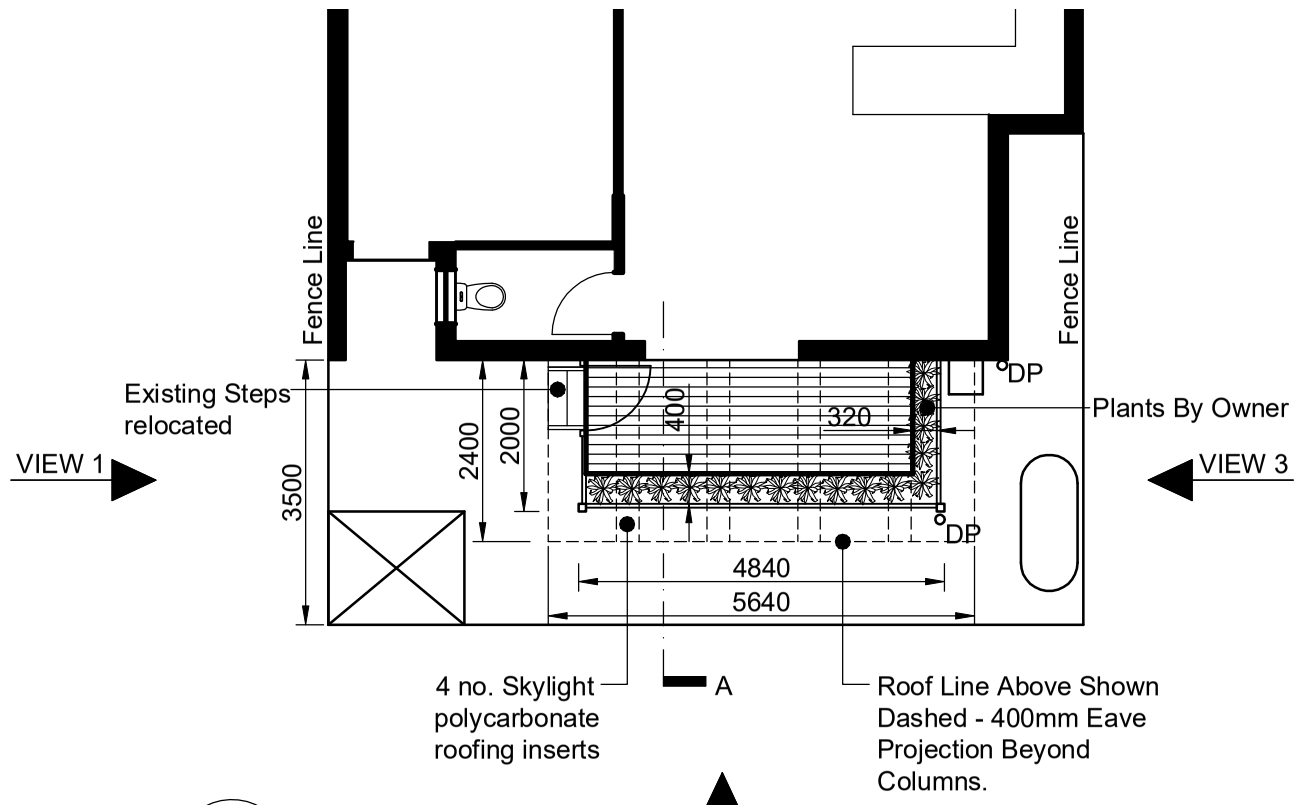

2 Proposed Plan

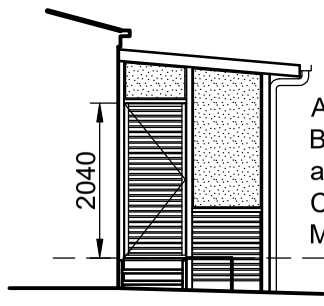

3 VIEW 1

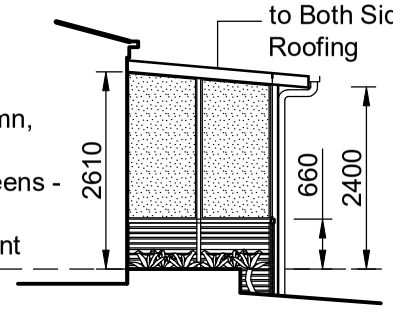

4 SECTION A

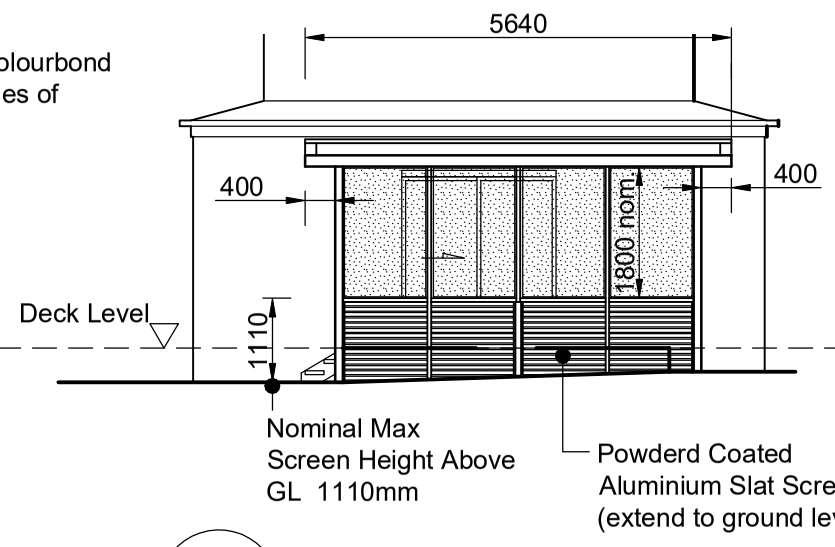

5 VIEW 2

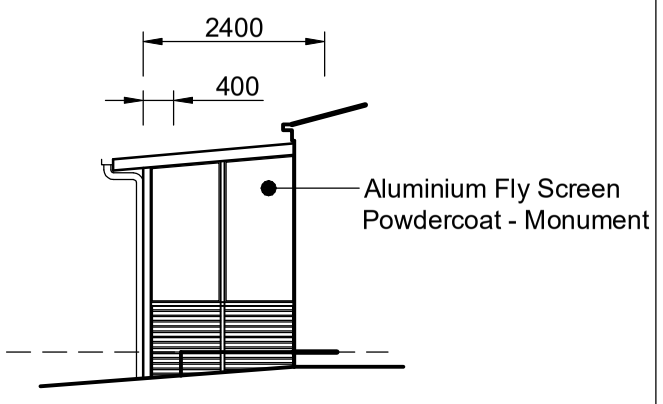

6 VIEW 3

Rev.	Description

General Notes:

Client :
Sasha DeSilva

Site Address:
21 Hood Crs
Fawkner 3060

Project :
Cat Pergola Enclosure

Drawing Title:
Plan & Elevations

Drawing No.: A004 April 2026
Scale : 1:100 @ A3
Revision : 0

Issue:
Concept

North