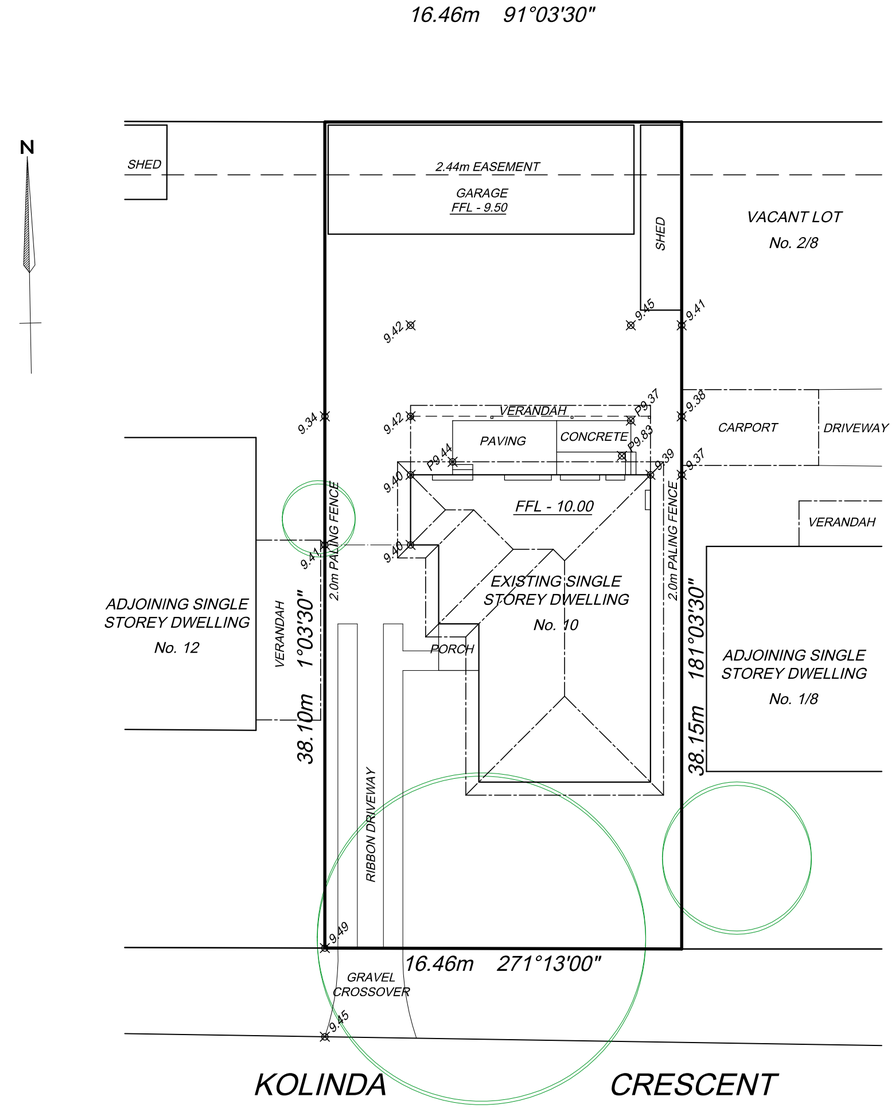

EXISTING SITE PLAN

SCALE 1:200

No works to be undertaken without the mandatory consents and permit approvals

jen designs
individual home design & drafting
(03) 59811707
post office box 4133
rosebud victoria 3939
jendes@bigpond.net.au
www.jendesigns.com.au

This drawing is protected by copyright law.
Copying without authorisation of JEN DESIGNS P/L is prohibited.

Proposed:
DECK & VERANDAH
At:
10 KOLINDA CRESCENT,
CAPEL SOUND 3940
Client:
H. LEE & L. PEIRCE

Rev.	Revision Description	Saved File: 10 kolinda cres - 06 bp4	Date

Design: FEB-2026	Scale: 1:200
Drawn: KJM	Ref no.: JD - 021 - 26
Plot date: 27.05.2026	Sheet No.: 01

N
A2

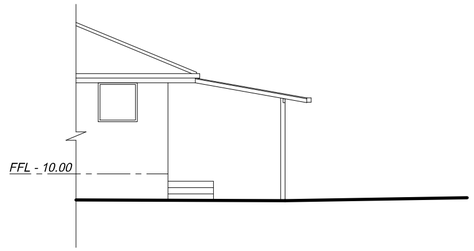

Ex. EAST ELEVATION
SCALE 1:100

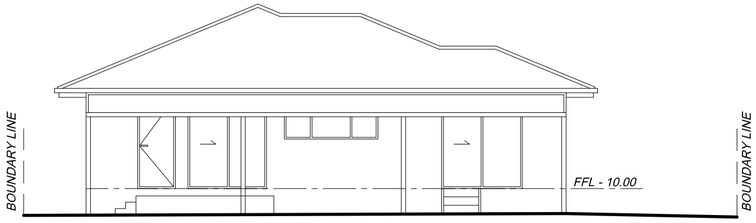

Ex. NORTH ELEVATION
SCALE 1:100

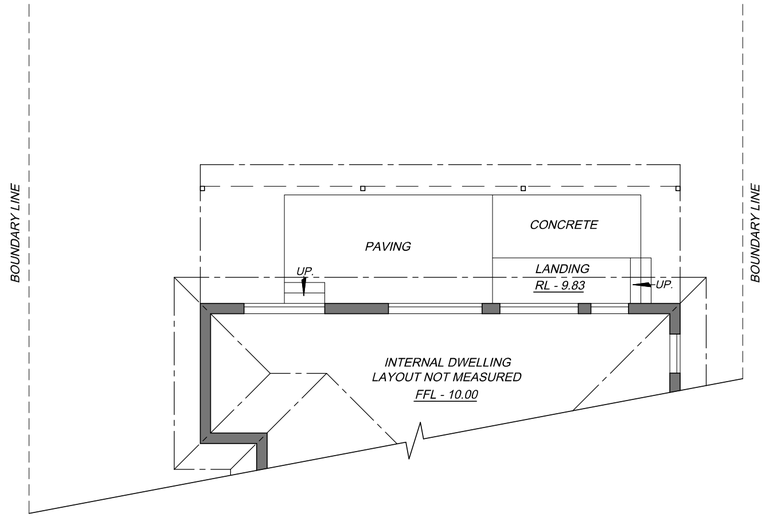

Ex. FLOOR PLAN
SCALE 1:100

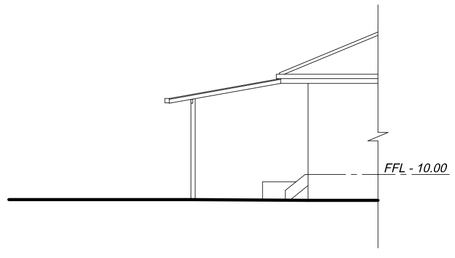

Ex. WEST ELEVATION
SCALE 1:100

No works to be undertaken without the mandatory consents and permit approvals

jen designs
individual home design & drafting
(03) 59811707
post office box 4133
rosebud victoria 3939
jendes@bigpond.net.au
www.jendesigns.com.au

This drawing is protected by copyright law.
Copying without authorisation of JEN DESIGNS P/L is prohibited.

Proposed:
DECK & VERANDAH
At:
10 KOLINDA CRESCENT,
CAPEL SOUND 3940
Client:
H. LEE & L. PEIRCE

Rev.	Revision Description	Saved File: 10 kolinda cres - 06 bp4	Date

Design FEB-2026	Scale 1:100
Drawn KJM	Ref no. JD - 021 - 26
Plot date 27.05.2026	Sheet No. 02

N

A2

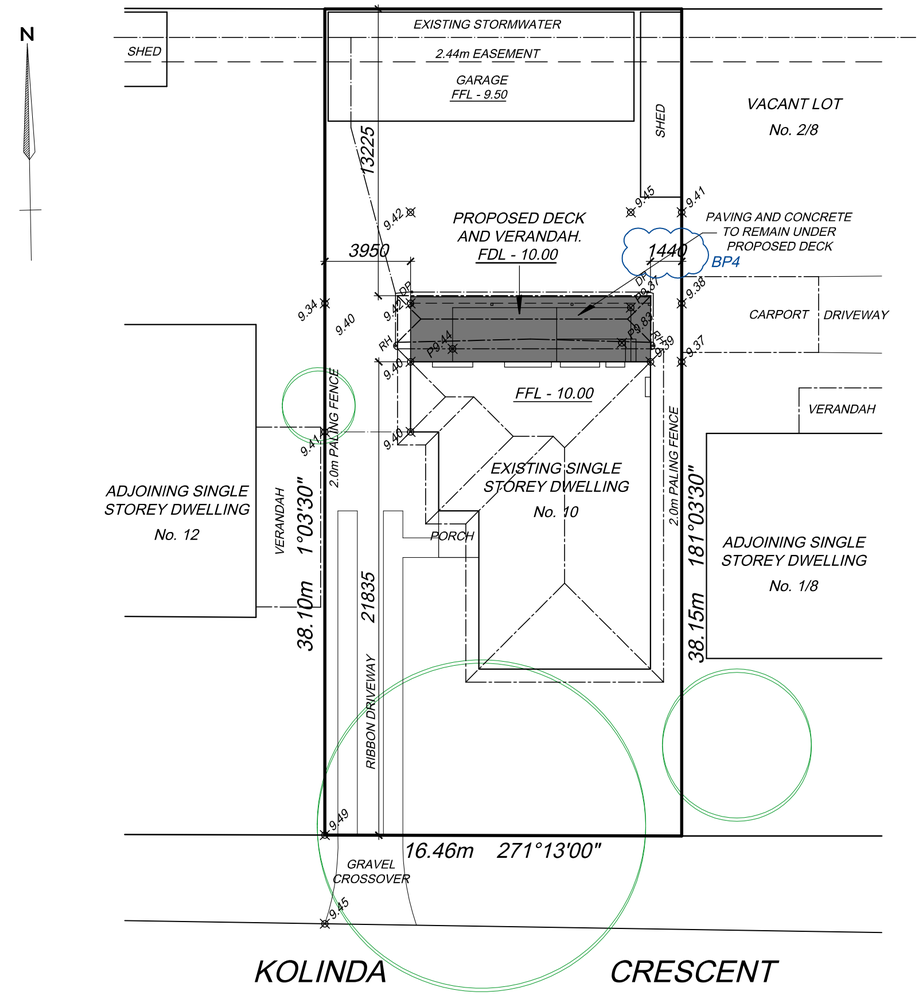

PROPOSED SITE PLAN

SCALE 1:200

GENERAL LEGEND	
DOWNPIPE	DP
RAINHEAD	RH
SOAK PIT	SP

SITE ANALYSIS		
SITE AREA	627.5 m²	
Ex. BUILDING FOOTPRINT	246.2 m²	
Pr. FOOTPRINT ADDITIONS	3.3 m²	
TOTAL FOOTPRINT	249.5 m²	39.7 %
DRIVEWAY AREA	32.4 m²	5.2 %
PERMEABLITY AREA	345.6 m²	55.1 %
GARDEN AREA	345.6 m²	55.1 %
STORMWATER DRAINAGE		
CONNECT NEW DOWN PIPES TO EXISTING STORMWATER.		

No works to be undertaken without the mandatory consents and permit approvals

jen designs
individual home design & drafting
(03) 59811707
post office box 4133
rosebud victoria 3939
jendes@bigpond.net.au
www.jendesigns.com.au

This drawing is protected by copyright law.
Copying without authorisation of JEN DESIGNS P/L is prohibited.

Proposed:
DECK & VERANDAH
At:
10 KOLINDA CRESCENT,
CAPEL SOUND 3940
Client:
H. LEE & L. PEIRCE

Rev.	Revision Description	Saved File: 10 kolinda cres - 06 bp4	Date
BP2	NBP CHECK LIST DATED 7.5.26		20.5.26
BP4	VERANDA ROOF CUT BACK TO REDUCE ADJOINING OVER SHADOWING		27.5.26

Design: FEB-2026	Scale: 1:200
Drawn: KJM	Ref no.: JD - 021 - 26
Plot date: 27.05.2026	Sheet No.: 03

A2

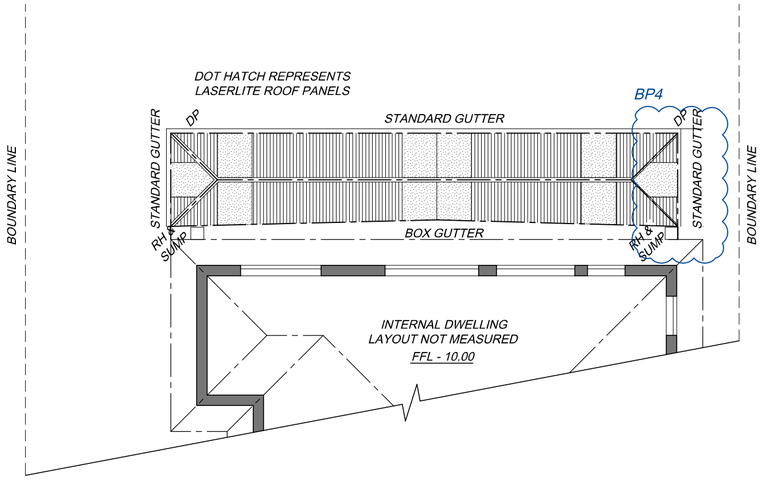

ROOF PLAN
SCALE 1:100

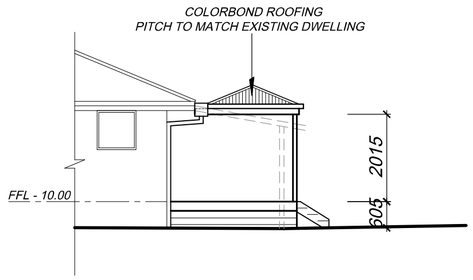

Pr. EAST ELEVATION
SCALE 1:100

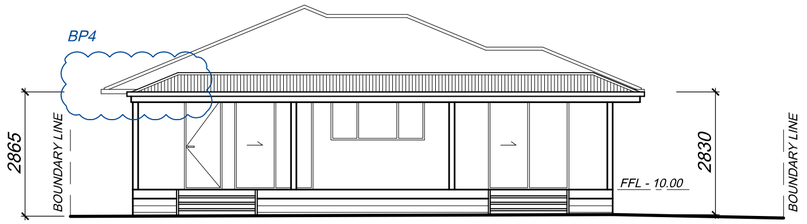

Pr. NORTH ELEVATION
SCALE 1:100

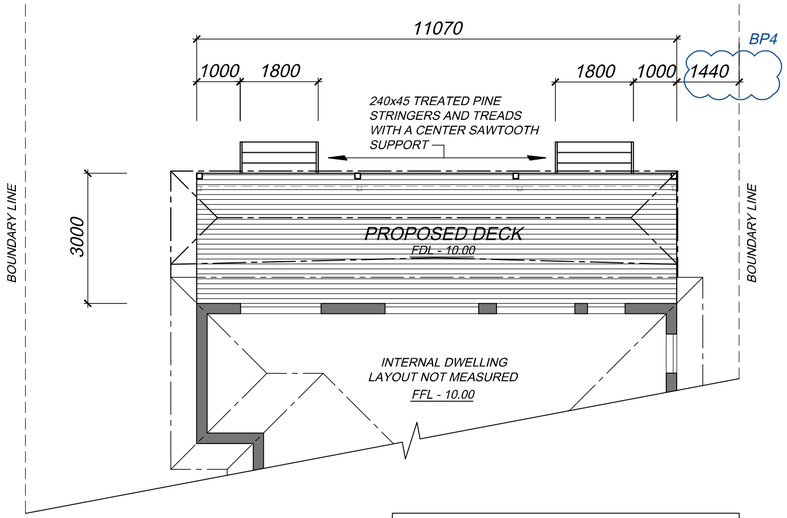

FLOOR AREAS		
EXISTING DWELLING	117.25m²	12.6 SQ
PROPOSED DECK	33.21m²	3.6 SQ

Pr. FLOOR PLAN
SCALE 1:100

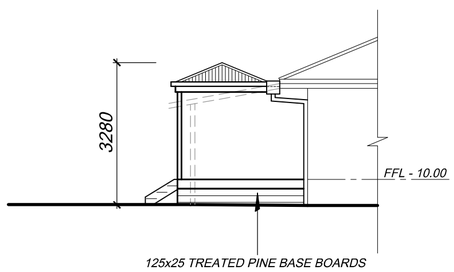

Pr. WEST ELEVATION
SCALE 1:100

No works to be undertaken without the mandatory consents and permit approvals

jen designs
individual home design & drafting
(03) 59811707
post office box 4133
rosebud victoria 3939
jendes@bigpond.net.au
www.jendesigns.com.au

This drawing is protected by copyright law.
Copying without authorisation of JEN DESIGNS P/L is prohibited.

Proposed:
DECK & VERANDAH
At:
10 KOLINDA CRESCENT,
CAPEL SOUND 3940
Client:
H. LEE & L. PEIRCE

Rev.	Revision Description	Saved File: 10 kolinda cres - 06 bp4	Date
BP2	NBP CHECK LIST DATED 7.5.26		20.5.26
BP4	VERANDA ROOF CUT BACK TO REDUCE ADJOINING OVER SHADOWING		27.5.26

Design: FEB-2026	Scale: 1:100
Drawn: KJM	Ref no.: JD - 021 - 26
Plot date: 27.05.2026	Sheet No.: 04

N
A2

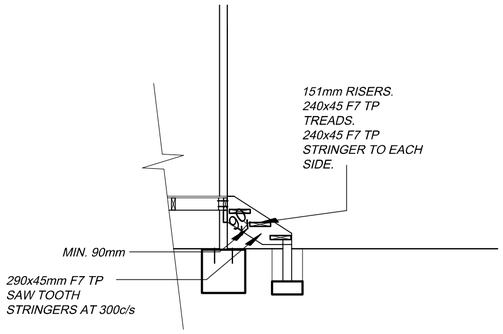

STAIR DETAILS:

THE STAIRCASE AND BALUSTRADE MUST BE CONSTRUCTED TO TAKE LOADING FORCES IN ACCORDANCE WITH AS 1170.1
TREADS MIN. 240mm - 355mm MAX.
RISERS MIN. 115mm - 190mm MAX.

SOLID RISER TO STAIRS OR PROVIDE TOE BOARD TO ENSURE LESS THAN 125mm OPENING BETWEEN TREADS.

CONTINUOUS HANDRAIL TO ONE SIDE TO BE 865-1000mm HEIGHT ABOVE TOE OF TREAD, RAIL OF BALUSTERS MUST NOT ALLOW 125mm TO PASS THROUGH

LANDINGS MUST BE NOT LESS THAN 750mm IN LENGTH

BALUSTRADE TO TOP OF STAIRS TO BE MIN. 1.0m HIGH ABOVE FINISHED FLOOR LEVEL

MIN 2.0m HEAD CLEARENCE FROM NOSING OF TREADS

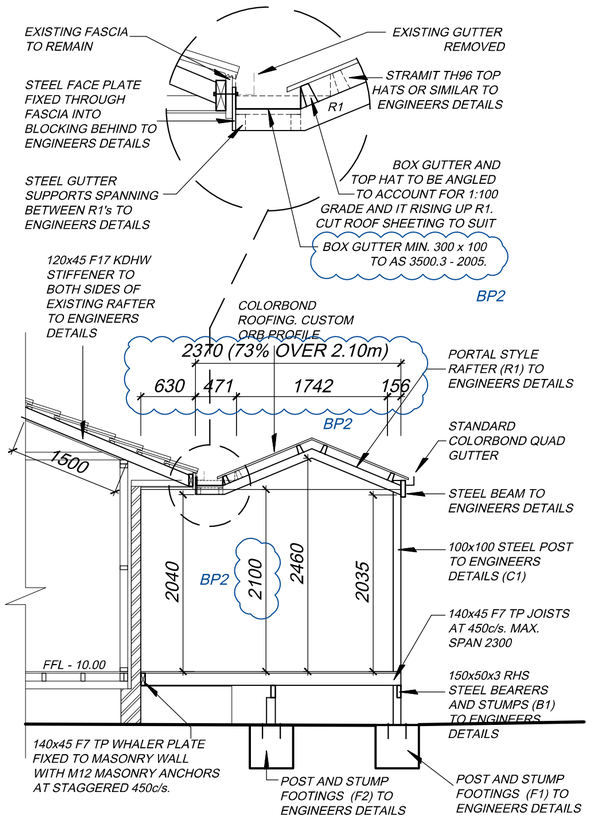

TYPICAL SECTION
SCALE 1:50

NOTE
REFER TO APPROVED ENGINEERING DETAILS FOR STEEL MEMBERS AND CONNECTION DETAILS

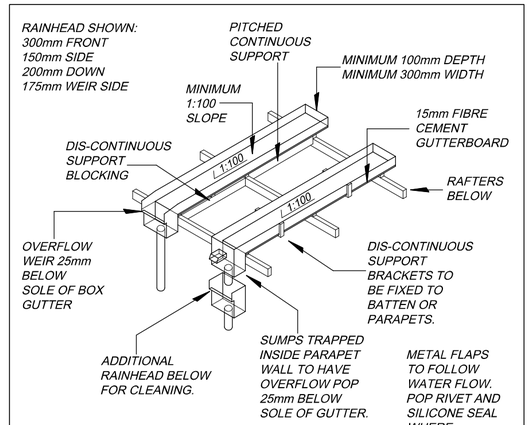

GENERIC BOX GUTTER DETAIL AS 3500.3
SCALE 1:50

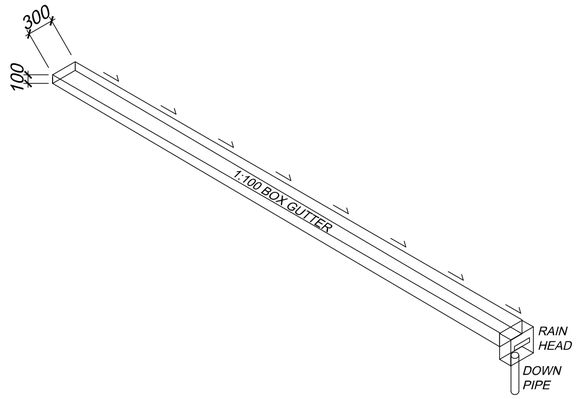

BP2

No works to be undertaken without the mandatory consents and permit approvals

jen designs
individual home design & drafting
(03) 59811707
post office box 4133
rosebud victoria 3939
jendes@bigpond.net.au
www.jendesigns.com.au

This drawing is protected by copyright law.
Copying without authorisation of JEN DESIGNS P/L is prohibited.

Proposed:
DECK & VERANDAH
At:
10 KOLINDA CRESCENT,
CAPEL SOUND 3940
Client:
H. LEE & L. PEIRCE

Rev.	Revision Description	Saved File: 10 kolinda cres - 06 bp4	Date
BP2	NBP CHECK LIST DATED 7.5.26		20.5.26

Design: FEB-2026	Scale: 1:100
Drawn: KJM	Ref no.: JD - 021 - 26
Plot date: 27.05.2026	Sheet No.: 05

N
A2

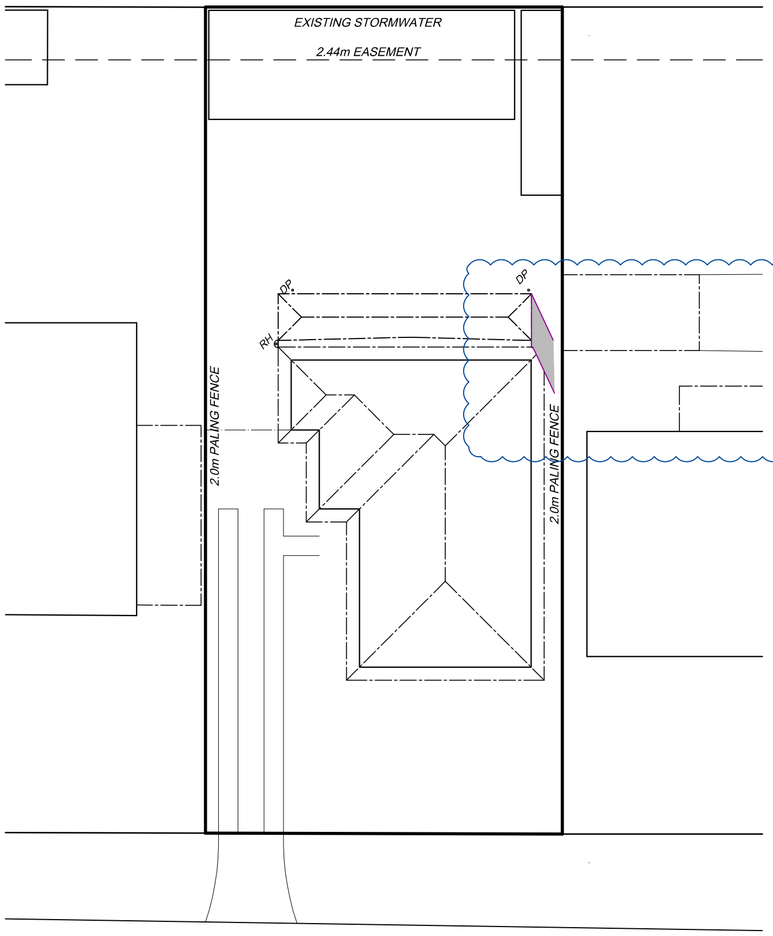

1pm SHADOW
SCALE 1:200

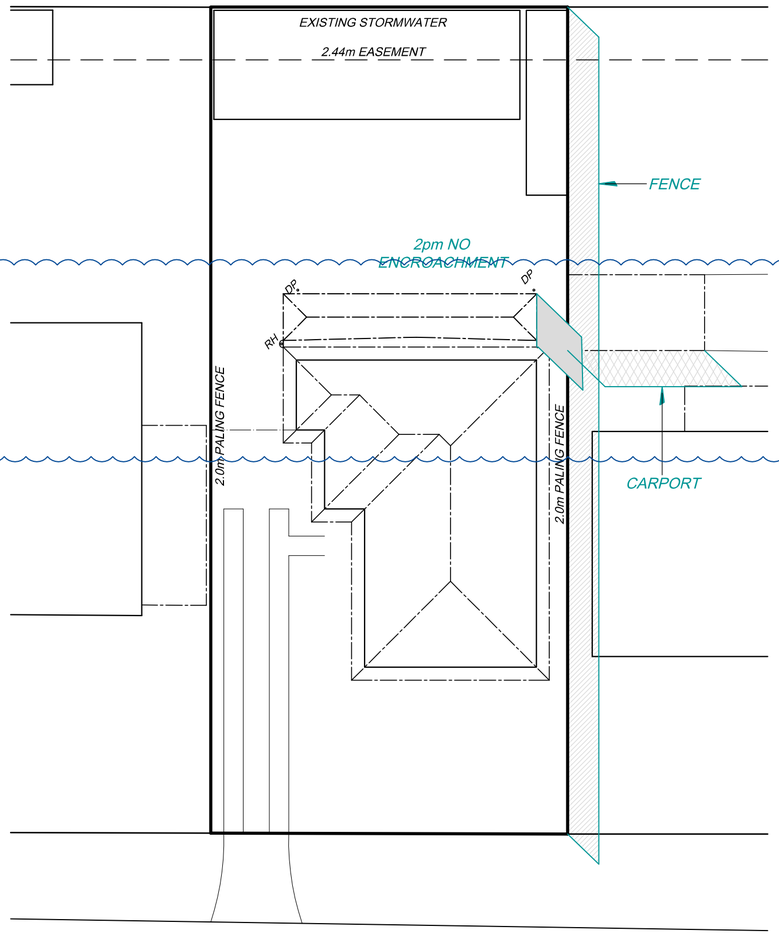

2pm SHADOW
SCALE 1:200

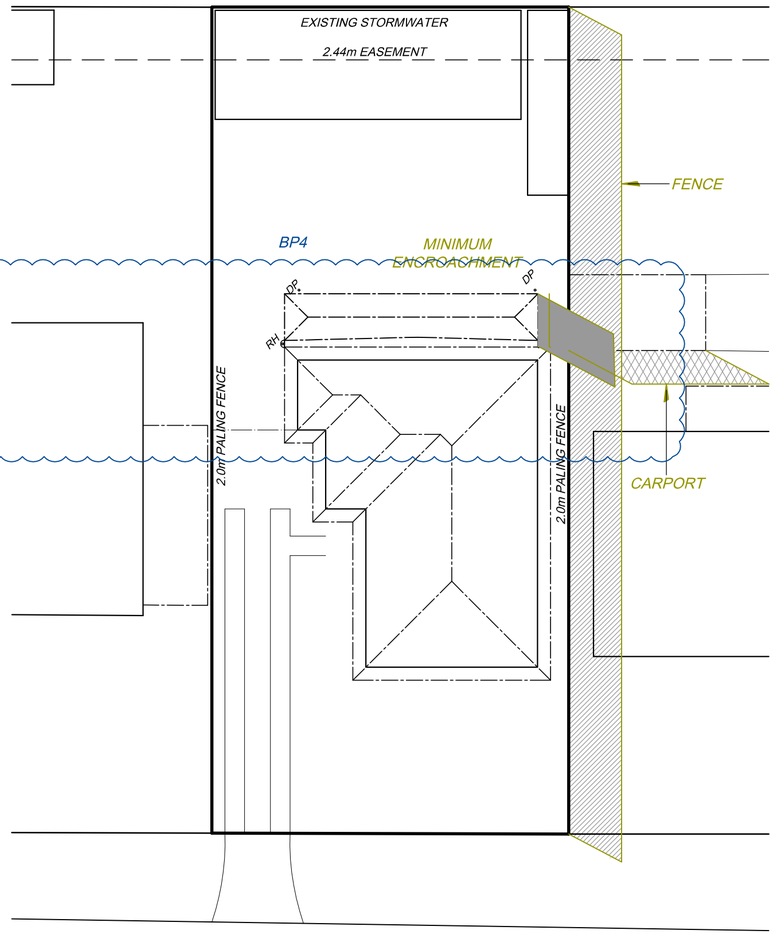

3pm SHADOW
SCALE 1:200

No works to be undertaken without the mandatory consents and permit approvals

jen designs
individual home design & drafting
(03) 59811707
post office box 4133
rosebud victoria 3939
jendes@bigpond.net.au
www.jendesigns.com.au

This drawing is protected by copyright law.
Copying without authorisation of JEN DESIGNS P/L is prohibited.

Proposed:
DECK & VERANDAH
At:
10 KOLINDA CRESCENT,
CAPEL SOUND 3940
Client:
H. LEE & L. PEIRCE

Rev.	Revision Description	Saved File: 10 kolinda cres - 06 bp4	Date
BP2	NBP CHECK LIST DATED 7.5.26		20.5.26
BP3	NBP CHECK LIST DATED 22.5.26		25.5.26
BP4	VERANDA ROOF CUT BACK TO REDUCE ADJOINING OVER SHADOWING		27.5.26

Design: FEB-2026	Scale: 1:200
Drawn: KJM	Ref no.: JD - 021 - 26
Plot date: 27.05.2026	Sheet No.: 06

N
A2

GENERAL NOTES: RESIDENTIAL

DEMOLITION OF RESIDENTIAL BUILDINGS:

A. IT IS THE BUILDER'S RESPONSIBILITY TO CARRY OUT AN AUDIT PRIOR TO THE COMMENCMENT OF ANY WORKS TO DETERMINE IF ASBESTOS IS PRESENT IN THE EXISTING WORKS. WHERE ANY ASBESTOS PRODUCT IS FOUND IN THE PROPOSED WORKS AREA DURING INITIAL INSPECTION OR DURING THE COURSE OF THE DEMOLITION WORKS THE BUILDER SHALL ENGAGE AN AUTHORISED AND REGISTERED CONTRACTOR FOR SAFE REMOVAL AND LAWFULL DISPOSAL.

B. THE SPECIFICATIONS SPECIFY ONLY THE MINIMUM STANDARD OF WORK FOR THE DEMOLITION WORKS ON RESIDENTIAL, PROJECTS AND ALL WORKMANSHIP AND PRECAUTION SHALL BE TO BEST TRADE PRACTICE.

C. PRECAUTIONS MUST BE TAKEN BEFORE AND DURING DEMOLITION IN ACCORDANCE WITH AS 2601-2001: The Demolition of Structures.

D. DURING THE PROGRESS OF THE DEMOLITION, THE WORKS SHALL BE UNDER THE CONTINUOUS SUPERVISION OF THE DEMOLISHER OR OF AN EXPERIENCED FOREMAN, AND DEMOLITION SHALL BE EXECUTED STOREY BY STOREY COMMENCING AT THE ROOF AND WORKING DOWNWARDS.

E. THE DEMOLITION MUST NOT BE COMMENCED UNTIL THE PRECAUTIONARY MEASURES HAVE BEEN INSPECTED AND APPROVED BY THE RELEVANT BUILDING SURVEYOR.

F. THE DEMOLISHER SHALL CONSTRUCT A TEMPORARY CROSSING PLACED OVER THE FOOTPATH, AS REQUIRED BY THE COUNCIL.

G. NO PART OF ANY EXTERNAL WALL ON OR WITHIN 3.0m OF A STREET ALIGNMENT MAY BE PULLED DOWN, EXCEPT DURING THE HOURS THAT THE RELEVANT BUILDING SURVEYOR DIRECTS.

H. PROTECTIVE OUTRIGGERS, FENCES, AWNINGS, HOARDING, BARRICADES AND THE LIKE MUST BE INSTALLED WHERE NECESSARY TO GUARD AGAINST DANGER TO LIFE OR PROPERTY OR WHEN REQUIRED BY THE RELEVANT BUILDING SURVEYOR.

I. DUST CREATING MATERIAL, UNLESS THOROUGHLY DAMPENED DOWN, SHALL NOT BE THROWN OR DROPPED FROM THE BUILDING BUT SHALL BE LOWERED BY HOISTING APPARATUS OR REMOVED BY MATERIAL CHUTES. ALL CHUTES SHALL BE COMPLETELY ENCLOSED AND A DANGER SIGN SHALL BE AT THE DISCHARGE END OF EVERY CHUTE.

J. ALL PRACTICABLE PRECAUTIONS HALL BE TAKEN TO AVOID DANGER FROM COLLAPSE OF A BUILDING WHEN ANY PART OF A FRAMED OR PARTLY FRAMED BUILDING IS REMOVED.

K. DEMOLISHED MATERIAL SHALL NOT BE ALLOWED TO REMAIN ON ANY FLOOR OR STRUCTURE IF THE WEIGHT OF THE MATERIAL EXCEEDS THE SAFE CARRYING CAPACITY OF THE FLOOR OR STRUCTURE AND SUCH MATERIAL SHALL NOT BE SO PILED OR STACKED THAT IT WILL ENDANGER WORKMEN OR OTHER PERSONS AND SHALL BE REMOVED AS SOON AS PRACTICABLE FROM THE SITE.

L. NO WALL, CHIMNEY OR OTHER STRUCTURE OR PART OF A STRUCTURE SHALL BE LEFT UNATTENDED OR UNSUPPORTED IN SUCH A CONDITION THAT IT MAY COLLAPSE DUE TO WIND OR VIBRATION OR OTHERWISE BECOME DANGEROUS.

M. BEFORE DEMOLITION IS COMMENCED AND ALSO DURING THE PROGRESS OF SUCH WORKS, ALL ELECTRICAL CABLE OR APPARATUS WHICH ARE LIABLE TO BE A SOURCE OF DANGER – OTHER THAN CABLE OR APPARATUS USED FOR THE DEMOLITION WORKS – SHALL BE DISCONNECTED.

N. ARRANGEMENTS SHALL BE MADE WITH THE RELEVANT ELECTRICAL SUPPLY AUTHORITY FOR THE DISCONNECTION OF ELECTRICAL MAINS SUPPLY EXCEPT THAT, WHERE PARTIAL DEMOLITION IS PROPOSED, THE LICENSES ELECTRICAL CONTRACTOR SHALL SATISFY THE RELEVANT ELECTRICAL SUPPLY AUTHORITY THAT THE PORTION OF THE BUILDING TO BE DEMOLISHED HAS BEEN ISOLATED.

O. THE DEMOLISHER SHALL BE RESPONSIBLE FOR THE DISCONNECTION OF ALL TELECOMMUNICATION SUPPLIES.

P. THE DEMOLISHER SHALL BE RESPONSIBLE TO CUT AND SEAL ANY STORMWATER, SEWER PIPES, WATER SERVICES, GAS SERVICES AND THE LIKE.

Q. THE POSITION OF CAPPED SEWER AND STORM WATER DRAINS, SEALED-OFF WATER SUPPLY LINES, GAS SUPPLY LINES AND THE LIKE ARE TO BE CLEARLY MARKED ON THE SITE.

R. ANY SEPTIC TANK(S) ON THE DEMOLITION SITE SHALL BE EMPTIED AND FILLED WITH CLEAN SAND, OR REMOVED ENTIRELY AND ANY SOAK WELLS, LEACH DRAINS OR SIMILAR APPARATUS SHALL BE REMOVED OR FILLED WITH CLEAN SAND.

S. ANY SWIMMING POOLS, PONDS OR THE LIKE EITHER ON THE DEMOLITION SITE OR ON THE NEIGHBOURING ALLOTMENTS WHERE AFFECTED BY THE DEMOLITION WORKS SHALL BE ADEQUATELY FENCED AND MADE SAFE, SO AS TO COMPLY WITH AS 1926.1 PART 1: Swimming pool safety - Safety barriers for swimming pools - Parts 1 & 2 PRIOR TO COMMENCEMENT OF ANY DEMOLITION WORKS.

T. MATERIALS REMOVED OR DISPLACED FROM THE BUILDING SHALL NOT BE PLACED IN ANY STREET, ROAD OR RIGHT OF WAY AND BEFORE COMMENCING, WHERE REQUIRED, SHALL BE KEPT SPRAYED WITH WATER SO AS TO PREVENT ANY NUISANCE FROM DUST.

U. MATERIALS REMOVED OR DISPLACED FROM THE BUILDING BEING DEMOLISHED OR MATERIALS LEFT STANDING SHALL NOT BE BURNED ON THE DEMOLITION SITE.

V. REMOVAL OF BUILDING BY ROAD MUST BE APPROVED BY RELEVANT COUNCILS TRAFFIC ENGINEER.

W. A SITE MANAGEMENT PLAN IS TO BE IMPLEMENTED DURING DEMOLITION WORKS TO CONTROL SEDIMENT RUN-OFF IN ACCORDANCE WITH EPA VICTORIA PUBLICATION #275: CONSTRUCTION TECHNIQUES FOR SEDIMENT POLLUTION CONTROL. PROVIDED "PROPEX" OR EQUIVALENT SILT FENCES TO THE LOW SIDE OF THE ALLOTMENT AND AROUND ALL SOIL STOCKPILES AND STORM WATER INLET PITS/SUMPS AND INSTALL "SILT STOP" FILTER BAGS OVER ALL STORM WATER ENTRY PITS DURING DEMOLITION WORKS. "SUPERGRO" OR EQUIVALENT EROSION CONTROL FABRIC TO BE PLACED OVER GARDEN BEDS TO PREVENT SURFACE EROSION DURING REVEGETATION PERIOD.

COPYRIGHTS AND GENERAL NOTES:

1. THIS DRAWING IS PROTECTED BY FEDERAL COPYRIGHT LAW, COPYING IN ANY SHAPE OR FORM, IN WHOLE OR IN PART WITHOUT WRITTEN AUTHORISATION OF JEN DESIGNS P/L IS STRICTLY PROHIBITED.
2. THESE PLANS HAVE BEEN PREPARED FOR THE EXCLUSIVE USE BY THE CLIENT AND SELECTED BUILDER OR CONTRACTOR OF JEN DESIGNS P/L ('THE DESIGNER') FOR THE TITLE PROPERTY EXPRESSLY NOMINATED. ANY OTHER PERSON WHO USES OR RELIES ON THESE PLANS WITHOUT THE DESIGNER'S WRITTEN CONSENT DOES SO AT THEIR OWN RISK AND NO RESPONSIBILITY IS ACCEPTED BY THE DESIGNER FOR SUCH USE AND/OR RELIANCE.
3. ALL MATERIALS AND WORK PRACTICES SHALL COMPLY WITH, BUT NOT LIMITED TO THE BUILDING REGULATIONS 2018, THE NATIONAL CONSTRUCTION CODE SERIES 2022 BUILDING CODE OF AUSTRALIA VOLUME 2 AND ALL RELEVANT CURRENT AUSTRALIAN STANDARDS (AS AMENDED) REFERRED TO THEREIN.
4. FOR ALL WORKS REFER TO NATIONAL CONSTRUCTION CODE (NCC)2022 VOLUME 2 EDITION
5. DO NOT SCALE DRAWINGS – USE WRITTEN DIMENSIONS ONLY.
6. THESE PLANS ARE TO BE READ IN CONJUNCTION WITH ALL RELEVANT STRUCTURAL AND ALL OTHER CONSULTANTS DRAWINGS/DETAILS AND WITH ANY OTHER WRITTEN INSTRUCTIONS ISSUED IN THE COURSE OF THE CONTRACT.
7. VARIATIONS TO PRINTED DRAWINGS ARE NOT PERMITTED BY OTHERS. ALL DESIGN AND CONSTRUCTION CHANGES ARE TO BE CONFIRMED AND IMPLIMENTED BY JEN DESIGNS P/L.
8. SETOUT AND CONSTRUCTION TO BE UNDERTAKEN FROM APPROVED BUILDING PERMIT PLANS ONLY. IF VARIATION IS REQUIRED, APPROVAL FROM JEN DESIGNS P/L AND RELEVANT BUILDING SUREVEYOR TO BE OBTAINED PRIOR TO IMPLIMENTING ANY VARIATIONS.
9. THESE NOTES ARE NOT A SUBSTITUTE FOR REGULATIONS, STATUTORY REQUIREMENTS OR BUILDING PRACTICE. THEY ARE PROVIDED ONLY AS GUIDELINES, NO RESPONSIBILITY IS ACCEPTED FOR THEIR USE.

AUSTRALIAN STANDARDS:

10. ALL MATERIALS AND WORK PRACTICES SHALL COMPLY, BUT NOT BE LIMITED TO THE CURRENT BUILDING REGULATIONS, THE CURRENT NATIONAL CONSTRUCTION SERIES BUILDING CODE OF AUSTRALIA VOL 2 AND THE FOLLOWING CURRENT AUSTRALIAN STANDARDS:

AS1170.1	Structural design actions - Permanent, imposed and other actions
AS1288	Glass in buildings - Selection and installation
AS1562.1	Design and installation of sheet roof and wall cladding - Metal
AS1684	Residential timber-framed construction
AS1860.2	Particleboard flooring - Specifications
AS1926.1	Swimming pool safety - Safety barriers for swimming pools
AS2047	Windows in buildings - Selection and installation
AS2049	Roof tiles
AS2050	Installation of roof tiles
AS2870	Residential slabs and footings (in conjunction with soil report).
AS2904	Damp-proof courses and flashings
AS3600	Concrete structures
AS3660	Termite management
AS3700	Masonry structures
AS3740	Waterproofing of domestic wet areas
AS3786	Smoke alarms
AS3959	Construction of buildings in bushfire-prone areas
AS4055	Wind loads for housing
AS4100	Steel structures
AS4586	Slip resistance classification of new pedestrian surface materials

OWNER AND BUILDER RESPONSIBILTIES:

11. A BUILDING PERMIT IS REQUIRED PRIOR TO THE COMMENCEMENT OF THESE WORKS. THE RELEASE OF THESE DOCUMENTS IS CONDITIONAL TO THE OWNER/BUILDER OBTAINING THE REQUIRED BUILDING PERMIT. THE OWNER/BUILDER SHALL ONLY BUILD FROM THE LATEST BUILDING APPROVED STAMPED PLANS.
12. THE OWNER/BUILDER AND SUBCONTRACTORS SHALL CHECK AND VERIFY ALL DIMENSIONS, LEVELS, SETBACKS AND SPECIFICATIONS AND ALL OTHER RELEVANT DOCUMENTATION PRIOR TO COMMENCING ANY WORKS OR ORDERING MATERIALS AND SHALL BE RESPONSIBLE FOR ENSURING THAT ALL BUILDING WORKS CONFORM TO THE BUILDING CODE OF AUSTRALIA, AS CODES (CURRENT EDITIONS), BUILDING REGULATIONS, LOCAL BY-LAWS AND TOWN PLANNING REQUIREMENTS. REPORT ANY DISCREPANCIES TO THIS OFFICE FOR CLARIFICATION.
13. THE BUILDER SHALL TAKE ALL STEPS NECESSARY TO ENSURE THE STABILITY AND GENERAL WATER TIGHTNESS OF ALL NEW AND/OR EXISTING STRUCTURES DURING ALL WORKS.

SITE PREPARATION:

14. THE BUILDER AND SUBCONTRACTOR SHALL ENSURE THAT ALL STORMWATER DRAINS, SEWER PIPES AND THE LIKE ARE LOCATED AT A SUFFICIENT DISTANCE FROM ANY BUILDINGS FOOTING AND/OR SLAB EDGE BEAMS SO AS TO PREVENT GENERAL MOISTURE PENETRATION, DAMPNESS, WEAKENING AND UNDERMINING OF ANY BUILDING AND ITS FOOTING SYSTEM.
RECOMMENDED 1.0m BUILDING OFFSET TO SOAK PITS, BOUNDARIES, SEWER PIPES AND SEWER BRANCHES.
15. STORMWATER TO BE TAKEN TO LEGAL POINT OF DISCHARGE TO THE RELEVANT AUTHORITIES APPROVAL. WITH A MINIMUM 1:100 GRADE AND INSPECTION OPENINGS AT 9.0m CENTRES AND AT EACH CHANGE IN DIRECTION TO THE SATISFACTION OF THE RELEVANT AUTHORITY. NO LESS THAN 100mm GROUND COVER OVER STORMWATER DRAIN.
16. INSTALLATION OF SEWER & SEPTIC SYSTEM AND ALL OTHER SERVICES SHALL COMPLY WITH THE RESPECTIVE SUPPLY AUTHORITY REQUIREMENTS.
17. WHERE THE BUILDING (EXCLUDES A DETACHED CLASS 10) IS LOCATED IN A TERMITE PRONE AREA THE AREA TO UNDERSIDE OF the BUILDING AND PERIMETER IS TO BE TREATED AGAINST TERMITE ATTACK. AS 3660.

FOOTINGS AND SLAB NOTES:

18. CONCRETE FLOOR TO BE SETOUT AND CONSTRUCTED AS PER PLANS OR ENGINEERS DOCUMENTS PROVIDED INCONJUNCTION WITH SOIL REPORT, SLAB CONSTRUCTION TO COMPLY WITH AS2870.
REINFORCED SLABS, PAD AND STRIP FOOTINGS TO BE 25 MPa STRENGTH. BLINDING CONCRETE TO BE 15 MPa
19. PROVIDE CLEARANCE FROM UNDERSIDE OF BEARER TO FINISHED GROUND LEVEL OF 150mm FOR FLOOR WITH STRIP FLOORING OR 200mm FOR FLOORS WITH PARTICLE BOARD FLOORING. 400mm IN TERMITE AREAS.
20. SUB-FLOOR VENTS TO BE BELOW BEARER AND PROVIDE A RATE OF 6000 mm² CLEAR VENTILATION PER 1.0m RUN OF EXTERNAL MASONRY WALL AND 2200mm² CLEAR VENTILATION PER 1.0m RUN OF INTERNAL DWARF WALL.
21. FOOTINGS NOT TO ENCROACH TITLE BOUNDARIES AND EASEMENT LINES.
22. CONCRETE STUMPS: - UNLESS OTHERWISE NOMINATED
    - 100mm SQ. UP TO 1400mm LONG (1 No. H.D. WIRES)
    - 100mm SQ. 1401mm TO 1800mm LONG (2 No. H.D. WIRES)
    - 125mm SQ. 1801mm TO 3000mm LONG (2 No. H.D. WIRES)

    NOTE: 100mm SQ. STUMPS EXCEEDING 1200mm ABOVE GROUND TO BE BRACED WHERE NO PERIMETER BASE BRICKWORK PROVIDED.

MASONARY AND WALL FRAMING NOTES:

23. BUILDINGS IN MARINE OR OTHER EXPOSURE ENVIRONMENTS SHALL HAVE MASONRY UNITS, MORTAR AND ALL BUILT IN COMPONENTS AND THE LIKE COMPLYING WITH THE DURABILITY REQUIREMENTS OF TABLE 4.1 OF AS 4773.1-2015 Masonary in small buildings - Part 1: Design
24. PROVIDE WALL TIES TO BRICKWORK AT MAXIMUM 600cts IN EACH DIRECTION AND WITHIN 300mm OF ARTICULATION JOINTS.
25. BUILDING ARTICULATION:- TO ALL MASONRY WALLS PROVIDE FULL HEIGHT VERTICAL JOINTS AND/OR OPENINGS FROM FOOTINGS TO EAVES AT NO GREATER THAN 6 METRE INTERVALS OR AS ENGINEER'S RECOMMENDATIONS.
26. WALL BRACING AND TIE DOWN TO COMPLY WITH AS 1684 AND AS 1170.2 FOR SPECIFIED WIND SPEED.

WINDOW FRAME AND GLAZING NOTES:

27. WINDOW SIZES NOMINATED ARE NOMINAL ONLY. ACTUAL SIZE MAY VARY ACCORDING TO MANUFACTURER. WINDOW TO BE FLASHED ALL AROUND.
28. GLAZING, INCLUDING SAFETY GLAZING, SHALL BE INSTALLED TO A SIZE, TYPE AND THICKNESS SO AS TO COMPLY WITH:
    - BCA PART 3.6 FOR CLASS 1 AND 10 BUILDINGS WITHIN A DESIGN WIND SPEED OF NOT MORE THAN N3; AND
    - NCC 2022/BCA Vol 1 Part B1.4 for Class 2 and 9 Buildings
29. SAFETY GLAZING TO BE USED IN THE FOLLOWING CASES:
    I) ALL ROOMS – WITHIN 500mm VERTICAL OF FLOOR LEVEL.
    II) ALL GLAZING IN BATHROOMS, ENSUITES, SPA ROOMS AND SHOWERS (INCLUDING SHOWER DOORS, BATH ENCLOSURERS, UNSUPPORTED MIRRORS AND WINDOWS) SHALL BE GRADE 'A' SAFETY GLAZING MATERIAL, WHERE LOWEST SIGHT LINE IS LESS THAN 2.0m TO NCC 2022
    III) LAUNDRY - WITHIN 1200mm VERTICALLY FROM FLOOR LEVEL AND/OR WITHIN 300mm VERTICALLY OF TROUGH.
    IV) DOORWAY – WITHIN 300mm HORIZONTALLY FROM ALL DOORS.
    V) SHOWER SCREENS SHALL BE GRADE 'A' SAFETY GLASS.

WATERPROOFING OF DOMESTIC WET AREA NOTES:

30. WATERPROOFING AND WATER RESISTANCE OF WET AREAS, BEING BATHROOMS, SHOWERS, SHOWER ROOMS, LAUNDRIES, SANITARY COMPARTMENTS AND THE LIKE SHALL BE PROVIDED IN ACCORDANCE WITH AS 3740: Waterproofing of Domestic Wet Areas.
31. BUILDER OR CONTRACTOR TO PROVIDE AN IMPERVIOUS SUBSTRATE AND SELECTED SURFACE FINISH TO FLOORS AND WALLS WITHIN 1500mm RADIUS OF AN UNENCLOSED SHOWER, TO A HEIGHT OF 1800mm ON WALLS, OUTSIDE THE 1500mm UNENCLOSED SHOWER RADIUS, SPLASHBACKS ABOVE BATHS, SINKS, BASINS AND TROUGH AND THE LIKE TO BE 150mm HIGH.

STAIR AND LANDING NOTES:

32. STEP SIZES – (OTHER THAN FOR SPIRAL STAIRS) TO BE:
    - RISERS (R) – 190mm MAXIMUM AND 115mm MINIMUM
    - GOING (G) – 355mm MAXIMUM AND 240mm MINIMUM (PRIVATE STAIRS); (250mm FOR PUBLIC STAIRS).
    - 2 RISERS (R) AND 1 GOING (G) = 700mm MAXIMUM AND 550mm MINIMUM
    - WITH LESS THAN 125mm GAP BETWEEN OPEN TREADS.

    RISERS AND TREADS TO BE CONSTANT IN SIZE THROUGHOUT FLIGHT. ALL TREADS LANDINGS AND THE LIKE TO HAVE NON-SLIP FINISH OR SUITABLE NON-SKID STRIP NEAR EDGE OF NOSING.
    ENSURE MAXIMUM GAP BETWEEN RISERS DOES NOT TO EXCEED 125mm OR USE CLOSED RISERS.
33. STAIR LANDINGS:-
    LANDINGS ARE REQUIRED WHERE THE SILL OF A THRESHOLD OF A DOORWAY OPENS ONTO A STAIR THAT PROVIDES A CHANGE IN FLOOR LEVEL OR FLOOR TO GROUND LEVEL GREATER THAN 3 RISERS OR 570mm. THE LANDING SIZE MUST BE 750mm MIN.
34. ALL STAIR TREADS, LANDINGS AND THE LIKE TO HAVE A SLIP-RESISTANCE CLASSIFICATION OF P3 or R10 FOR DRY SURFACE CONDITIONS AND P4 or R11 FOR WET CONDITIONS, OR A NOSING STRIP WITH A SLIP-RESISTANCE CLASSIFICATION OF P3 FOR DRY SURFACE CONDITIONS AND P4 FOR WET SURFACE CONDITIONS.
    ALL SLIP-RESISTANCE TREATMENT TO A.S. 4586 AND LISTED IN NCC 2022
    TEST REPORTS VERIFYING COMPLIANCE TO BE SUBMITTED TO THE BUILDING SURVEYOR.

BARRIERS AND HANDRAIL NOTES:

35. PROVIDE BARRIERS WHERE CHANGE IN LEVEL EXCEEDS 1000mm ABOVE THE SURFACE BENEATH LANDINGS, RAMPS AND/OR TREADS. BARRIERS (OTHER THAN TENSIONED WIRE BARRIERS) TO BE:
    - 1000mm MINIMUM ABOVE FINISHED SURFACE LEVEL OF BALCONIES, LANDINGS OR THE LIKE, AND
    - TOP OF HANDRAIL 865mm MINIMUM ABOVE FINISHED SURFACE LEVEL OF STAIR NOSING OR RAMP, AND
    - VERTICAL WITH LESS THAN 125mm GAP BETWEEN, AND
    - ANY HOROZONTAL ELEMENT WITHIN THE BARRIER BETWEEN 150mm AND 760mm ABOVE THE FLOOR MUST NOT FACILITATE CLIMBING WHERE CHANGES IN LEVEL EXCEEDS 4.0 METRES ABOVE THE SURFACE BENEATH LANDINGS, RAMPS AND/OR TREADS.
36. A BARRIER IS REQUIRED TO THE TOP OF RETAINING WALLS WHEN DELINIATED BY A PATH OF ACCESS TO A BUILDING TO MINIMUM 1.0m HIGH AND COMPLY WITH NCC 2022
37. WIRE BARRIER CONSTRUCTION TO COMPLY WITH NCC 2022 FOR CLASS 1 AND 10 BUILDINGS
38. OPENINGS TO BEDROOM WINDOWS MUST BE PROVIDED WITH PROTECTION IF THE WINDOW IS ON A FLOOR MORE THAN 2.0m ABOVE THE NATURAL GROUND BELOW. EXCEPT WHEN THE SILL HEIGHT IS 1.7m ABOVE FLOOR. OPENINGS TO OTHER WINDOWS MUST BE PROVIDED WITH PROTECTION IF FLOOR HEIGHT IS GREATER THAN 4.0m. OPENING TO EITHER BE FITTED WITH A RESTRICTING DEVICE LIMITING OPENING TO 125mm OR A SCREEN WITH SECURE FITTINGS THAT CAN WITHSTAND OUTWARD HOROZONTAL ACTION OF 125 NEWTONS OF FORCE.
    OPENING PROTECTION MUST COMPLY WITH NCC 2022

SAFETY AND BUILDING AMENITY NOTES:

39. PROVIDE SMOKE ALARMS WITHIN 1.5m OF BEDROOM DOORS AND ON EVERY LEVEL / STOREY.
    REQUIRED TO BE HARD WIRED AND INTERCONNECTED IN NEW WORKS AND BATTERY OPERATED IN EXISTING AREAS COMPLYING WITH AS 3786 AND NCC 2022
40. DOORS TO SMALL W.C.'S (WHERE THE SWING OF THE DOOR IS WITHIN 1200mm OF THE PAN), MUST EITHER SWING OUTWARDS, SLIDE OR BE READILY REMOVABLE FROM THE OUTSIDE. I.E. SPLIT HINGES (LIFT OFF HINGES) WITH A CUT DOWN DOOR. NCC 2022
41. POOLS ARE TO BE ENCLOSED WITH MIN 1200 HIGH FENCE OR SCREEN IN ACCORDANCE WITH AS 1926.1 AND NCC 2022. A SIDE HUNG GATE MUST ONLY SWING AWAY FROM THE POOL ZONE WITH AN ACCESS LATCH MINIMUM 1500mm ABOVE FINISHED SURFACE AND MUST SELF-CLOSE. WINDOWS WITHIN THE POOL ZONE MUST BE RESTRICTED TO MAXIMUM 100mm OPENING. SLIDING DOORS AND SWING DOORS FROM CLASS 1 OR 10a BUILDINGS MUST NOT OPEN INTO THE SPECIFIED POOL ZONE.
42. BUSH FIRE PRONE AREAS TO COMPLY TO NCC 2022 AND AS3959: Construction of buildings in bushfire-prone areas.
43. THESE DRAWINGS SHALL BE READ IN CONJUNCTION WITH ANY HOUSE ENERGY RATING (HERS) REPORT AND SHALL BE CONSTRUCTED IN ACCORDANCE WITH THE STAMPED PLANS ENDORSED BY THE ACCREDITED THERMAL PERFORMANCE ASSESSOR WITHOUT ALTERATION. NCC 2022

jen designs
individual home design & drafting
(03) 59811707
post office box 4133
rosebud victoria 3939
jendes@bigpond.net.au
www.jendesigns.com.au

This drawing is protected by copyright law.
Copying without authorisation of JEN DESIGNS P/L is prohibited.

Client:
H. LEE & L. PEIRCE
Updated Sept 2023

Address:
10 KOLINDA CRESCENT
CAPEL SOUND

Sheet No:
07
JD 021 - 26

A2